BRAKE LIGHTS

Component Index

Noise Suppression Filter #1
Noise Suppression Filter #2
Brake Switch
Dash Fuse Box

BRAKE LIGHTS

Circuit Schematic

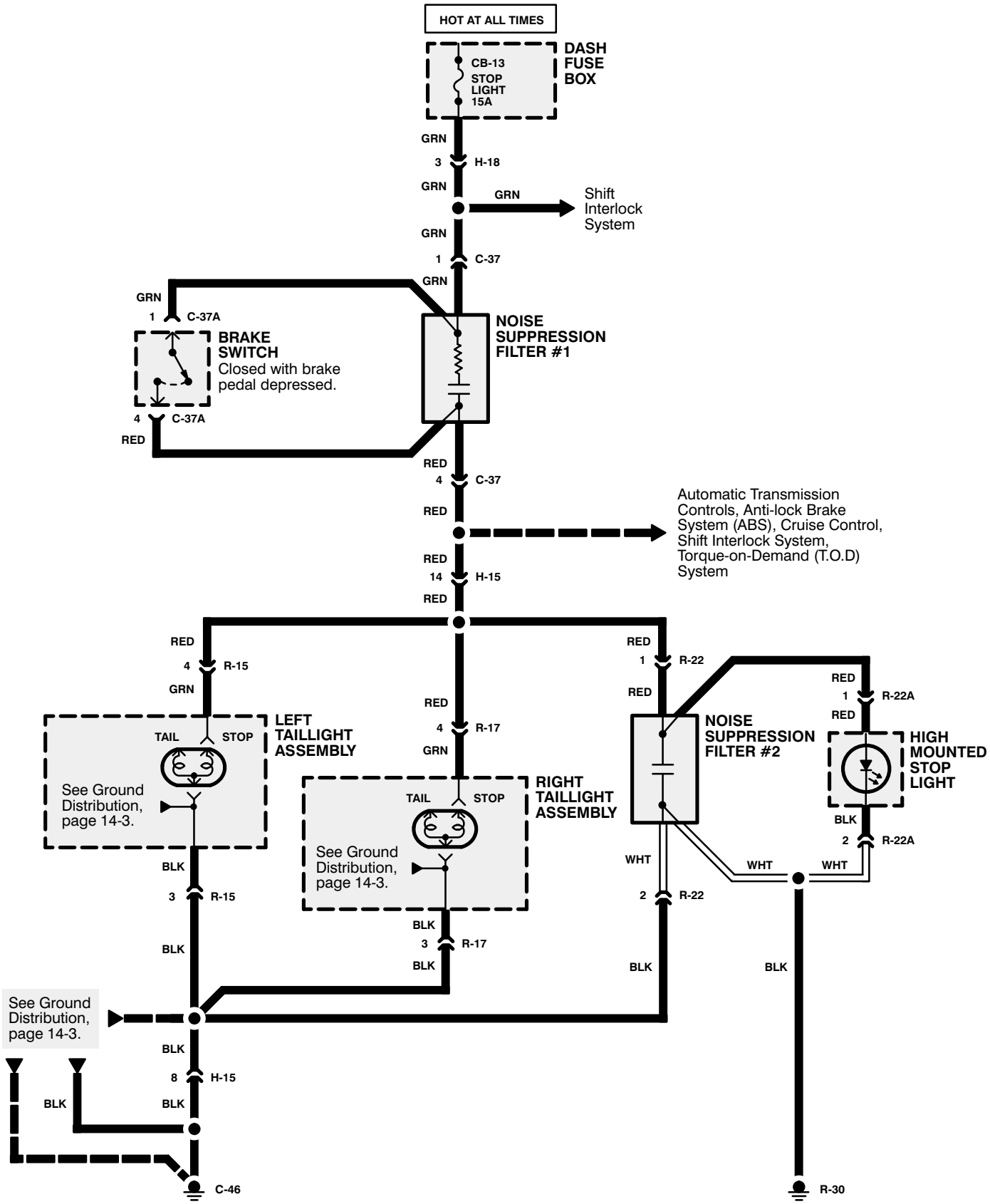

BRAKE LIGHTS

Component Location Index

(Refer to Section 201 for photographs.)

Component		Photo No.
Noise Suppression Filter #1	Behind left kick panel	40
Noise Suppression Filter #2	Center of rear roof panel, behind trim panel	72
Brake Switch	Below I/P, on brake pedal support	44
Dash Fuse Box	Behind left I/P side trim panel	36
Connector		
C-37 (4-BLK)	Behind lower left of I/P	44
H-15 (18-BLK)	Behind left side of I/P, above left kick panel on bracket	42
H-18 (20-WHT)	Behind I/P right side panel	58
R-15 (6-WHT)	Left rear of cargo compartment, behind trim panel	73
R-17 (6-WHT)	Right rear of cargo compartment, behind trim panel	74
R-22 (2-WHT)	Center of rear roof panel, behind trim panel	72
R-22A (2-WHT)	Center of rear roof panel, behind trim panel	72
Ground		
C-46	Behind left kick panel	40
R-30	Center of rear roof panel, behind trim panel	72

Circuit Operation

Circuit Operation

Battery voltage is applied to the noise suppression filter #1 and the brake switch at all times from the STOP LIGHT fuse CB-13. With the brake pedal depressed, the brake switch is closed and battery voltage is applied to the brake lights, and the brake lights go on. The high mounted stop light is made up of 84 LEDs arranged in 21 parallel circuits; each parallel circuit is made up of 4 LEDs and 2 resistors in series. The noise suppression filters are placed in the brake lights circuit to reduce interference with the sound system.